622Mbps ATM-Single Mode Transceiver

SFP, Duplex LC Connector, 1310nm FP LD for Single Mode Fiber, RoHS Compliant

Extended Operating Temperature from –40 to +85 ℃

RoHS Pb

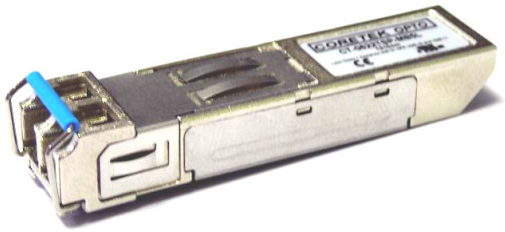

Features

- 1310nm FP LD
- Data Rate: 622Mbps, NRZ
- Single +3.3V Power Supply
- RoHS Compliant and Lead-free
- AC/AC Differential Electrical Interface
- Compliant with Multi-Source Agreement (MSA) Small Form Factor Pluggable (SFP)
- Duplex LC Connector
- Compliance with ATM Standard
- Eye Safety
  Designed to meet Laser Class 1 comply with EN60825-1

Applications

- ATM/SONET OC-12/SDH STM-4
- Single mode fiber links
- Optical-Electrical Interface Conversion

Description

The CT-0622TSP-MB5L-A from Coretek Opto Corp. is the high performance and cost-effective module for serial optical data communication applications specified for single mode of 622 Mb/s. It operates with +3.3V power supply. The module is intended for single mode fiber, operates at a nominal wavelength of 1310nm and complies with Multi-Source Agreement (MSA) Small Form Factor Pluggable (SFP). Each module consists of a transmitter optical subassembly, a receiver optical subassembly and an electrical subassembly. All of them are housed in a metal package and the combination produces a reliable component.

The module is a duplex LC connector transceiver designed to provide an ATM/SONET OC-12/SDH STM-4 compliant link for 622 Mb/s intermediate reach applications. The characteristics are performed in accordance with Telcordia Specification GR-468-CORE.

EMC

Most equipment utilizing high-speed transceivers will be required to meet the following requirements:

1) FCC in the United States
2) CENELEC EN55022 (CISPR 22) in Europe

To assist the customer in managing the overall equipment EMC performance, the transceivers have been designed to satisfy FCC class B limits and provide good immunity to radio-frequency electromagnetic fields.

Eye Safety

The transceivers have been designed to meet Class 1 eye safety and comply with EN 60825-1.

Coretek Opto Corp. 1F,10 Industry E. Rd. IV., Science-Based Industrial Park, Hsinchu, Taiwan, R.O.C.
http://www.coretek.com.tw Tel:886-3-5787871 Fax:886-3-5645105

02/02/2007
Version：D

Product Information

Model Number	Operating Voltage & SD Output	Distance	LD Type & Wavelength	Output Power	Sensitivity
CT-0622TSP-MB5L-A	*3.3V TTL AC/AC*	*15 km*	*1310 nm FP*	*-15 ~ -8 dBm*	*≦-28 dBm*

ABSOLUTE MAX RATINGS

PARAMETER	SYMBOL	MIN	MAX	UNIT	NOTE
Storage Temperature	T_S	-40	85	℃	
Supply Voltage	V_{CC}	0	6	V	
Data Input Voltage	---	0	Vcc	V	

OPERATING CONDITIONS

PARAMETER	SYMBOL	MIN.	TYP.	MAX.	UNIT	NOTE
Case Operating Temperature	T_A	-40		85	℃	
Supply Voltage	V_{CC}	3.1		3.5	V	
Data Input Voltage Swing	V_{ID}	400		1660	mV	

ELECTRICAL CHARACTERISTICS

PARAMETER	SYMBOL	MIN	MAX	UNIT	NOTE
Transmitter					
Transmitter Supply Current	I_{CCT}		200	mA	
Tx_ Disable Input Voltage - Low	V_{IL}	0	0.8	V	
Tx_ Disable Input Voltage - High	V_{IH}	2.0	Vcc	V	
Tx_ Fault Output Voltage - Low	V_{OL}	0	0.8	V	
Tx_ Fault Output Voltage - High	V_{OH}	2.0	Vcc	V	
Receiver					
Receiver Supply Current	I_{CCR}		100	mA	
Receiver Data Output Differential Voltage	V_{OD}	0.4	1.3	V	
Rx_LOS Output Voltage - Low	V_{OL}	0	0.8	V	
Rx_LOS Output Voltage - High	V_{OH}	2.0	Vcc	V	
MOD_DEF (1) , MOD_DEF (2) - Low	V_{IL}	-0.6	Vcc × 0.3	V	
MOD_DEF (1) , MOD_DEF (2) - High	V_{IH}	Vcc × 0.7	Vcc + 0.5	V	

TRANSMITTER ELECTRO-OPTICAL CHARACTERISTICS

PARAMETER	SYMBOL	MIN	TYP.	MAX	UNIT	NOTE
Optical Output Power	Po	-15		-8	dBm	1
Extinction Ratio	ER	8.2			dB	
Center Wavelength	λ_c	1275	1310	1355	nm	
Spectral Width (RMS)	$\Delta\lambda$			2.5	nm	
Optical Rise time (20%-80%)	t_r			1.2	ns	2
Optical Fall time (20%-80%)	t_f			1.2	ns	2
Output Eye	Compliant with ITU recommendation G.957					

Coretek Opto Corp.
http://www.coretek.com.tw
1F,10 Industry E. Rd. IV., Science-Based Industrial Park, Hsinchu, Taiwan, R.O.C.
Tel:886-3-5787871 Fax:886-3-5645105

02/02/2007
Version : D

RECEIVER ELECTRO-OPTICAL CHARACTERISTICS

PARAMETER	SYMBOL	MIN	TYP.	MAX	UNIT	NOTE
Maximum Input Optical Power	P_{max}	-3			dBm	3
Receiver Sensitivity	P_{min}			-28	dBm	3
Operating Wavelength	λ	1100		1600	nm	
Loss of Signal - Asserted	P_A	-42			dBm	
Loss of Signal - Deasserted	P_D			-27	dBm	
Loss of Signal -Hysterisis	P_D- P_A	0.5			dB	

Notes:

1. Measured average power coupled into 9/125 μ m single mode fiber.
2. These are 20-80% values.
3. Measured with 2^{23}-1 PRBS at BER<10^{-10}

TIMING CHARACTERISTICS

PARAMETER	SYMBOL	MIN	TYP.	MAX	UNIT	NOTE
TX_DISABLE Assert Time	t_off			10	µs	
TX_DISABLE Negate Time	t_on			1	ms	
Time to initialize, include reset of TX_FAULT	t_init			300	ms	
TX_FAULT from fault to assertion	t_fault			100	µs	
TX_DISABLE time to start reset	t_reset	10			µs	
Receiver Loss of Signal Assert Time (off to on)	t_{A,RX_LOS}			100	µs	
Receiver Loss of Signal Assert Time (on to off)	t_{D,RX_LOS}			100	µs	

BLOCK DIAGRAM OF TRANSCEIVER

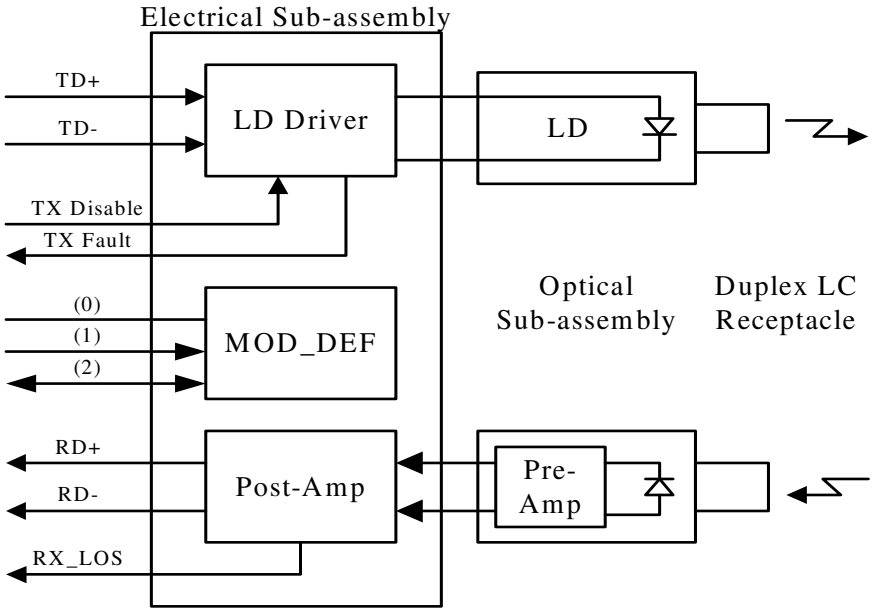

Coretek Opto Corp.
http://www.coretek.com.tw
1F,10 Industry E. Rd. IV., Science-Based Industrial Park, Hsinchu, Taiwan, R.O.C.
Tel:886-3-5787871 Fax:886-3-5645105

02/02/2007
Version : D

PIN OUT DIAGRAM OF TRANSCEIVER

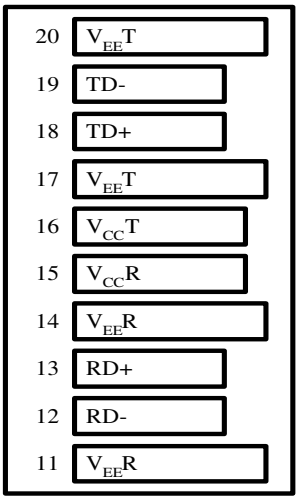

Top of Board

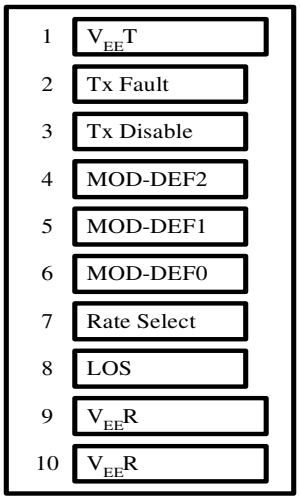

Buttom of Board (As Viewed through Top of Board

PIN OUT TABLE

Pin	Symbol	Functional Description
1	VeeT	Transmitter Ground
2	TX Fault	Transmitter Fault Indication
3	TX Disable	Transmitter Disable – Module disables on high or open
4	MOD-DEF(2)	Module Definition 2 – Two wire serial ID interface
5	MOD-DEF(1)	Module Definition 1 – Two wire serial ID interface
6	MOD-DEF(0)	Module Definition 0 – Grounded in module
7	Rate Select	Not Connected
8	LOS	Loss of Signal
9	VeeR	Receiver Ground
10	VeeR	Receiver Ground
11	VeeR	Receiver Ground
12	RD-	Inverse Received Data Out
13	RD+	Received Data Out
14	VeeR	Receiver Ground
15	VccR	Receiver Power
16	VccT	Transmitter Power
17	VeeT	Transmitter Ground
18	TD+	Transmitter Data In
19	TD-	Inverse Transmitter Data In
20	VeeT	Transmitter Ground

Coretek Opto Corp.
http://www.coretek.com.tw
1F,10 Industry E. Rd. IV., Science-Based Industrial Park, Hsinchu, Taiwan, R.O.C.
Tel:886-3-5787871 Fax:886-3-5645105
02/02/2007
Version : D

RECOMMENDED CIRCUIT SCHEMATIC

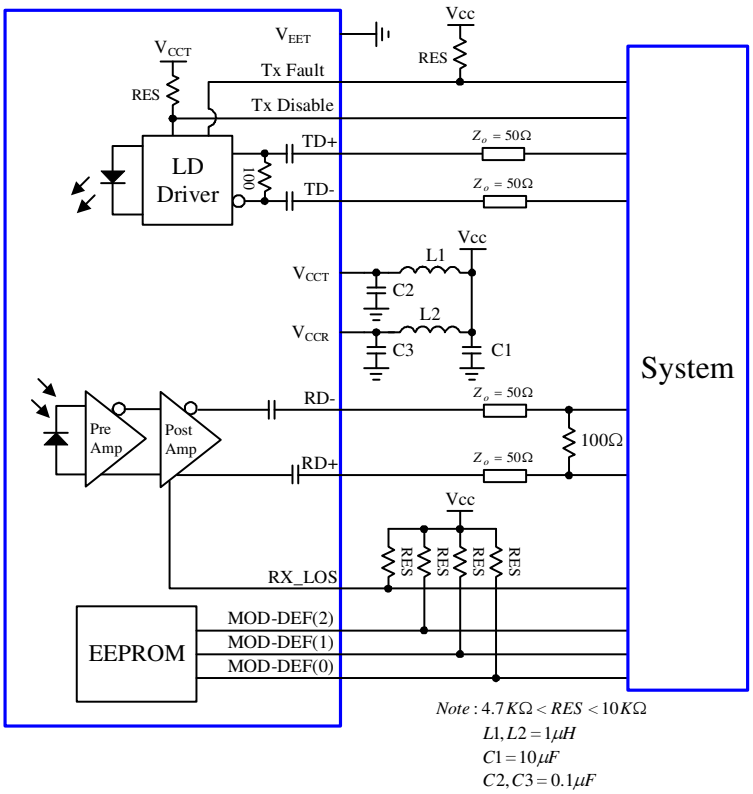

MECHANICAL DIMENSIONS

Units in mm

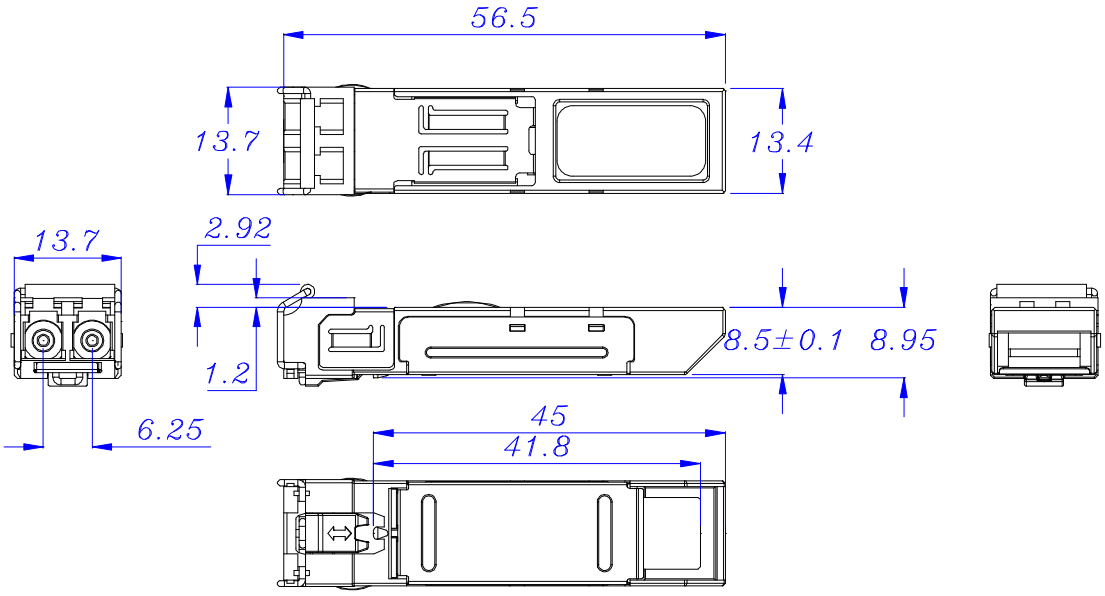

All dimensions are ±0.2mm unless otherwise specified.

Claim:

CORETEK Opto Corp. reserves the right to make changes in the specification described hereinafter without prior notice.

Coretek Opto Corp.
http://www.coretek.com.tw
1F,10 Industry E. Rd. IV., Science-Based Industrial Park, Hsinchu, Taiwan, R.O.C.
Tel:886-3-5787871 Fax:886-3-5645105

02/02/2007
Version : D